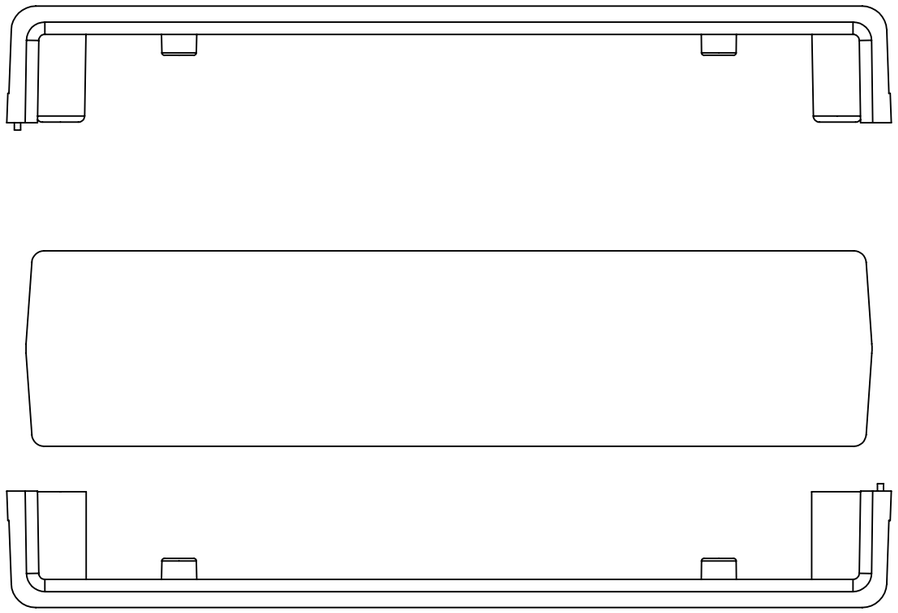

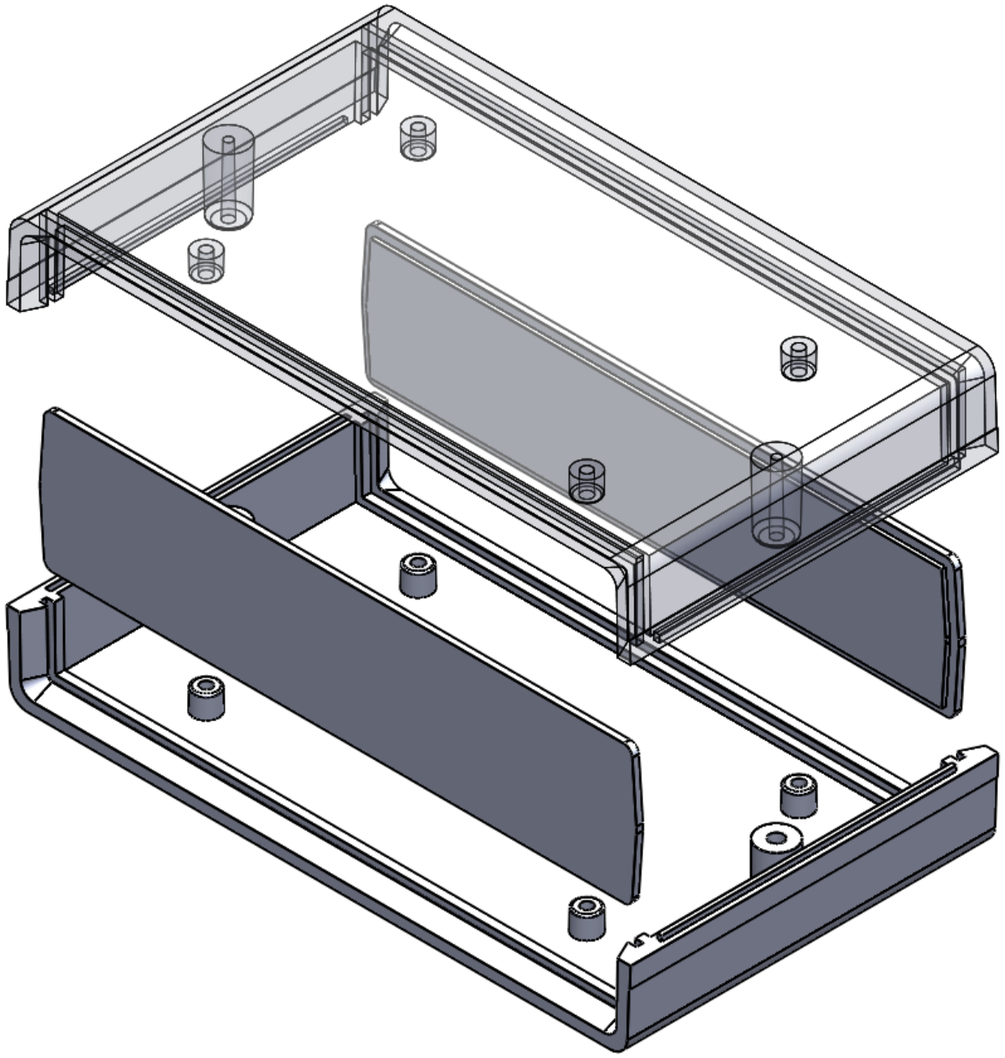

PROPRIETARY AND CONFIDENTIAL
THE INFORMATION CONTAINED IN THIS DRAWING IS THE SOLE PROPERTY OF ALTINKAYA ENCLOSURES. ANY REPRODUCTION IN PART OR AS A WHOLE WITHOUT THE WRITTEN PERMISSION OF ALTINKAYA ENCLOSURES IS PROHIBITED.

	NAME	DATE
DRAWN	Dursun CAN	
CHECKED	Ali Altınışık	

COMMENTS:

MATERIAL:

WEIGHT:

ARTICLE NO:

REVISION:

TITLE:

DWG NO. DT-085-Assembly

A3

SCALE:1:2

SHEET 1 OF 1

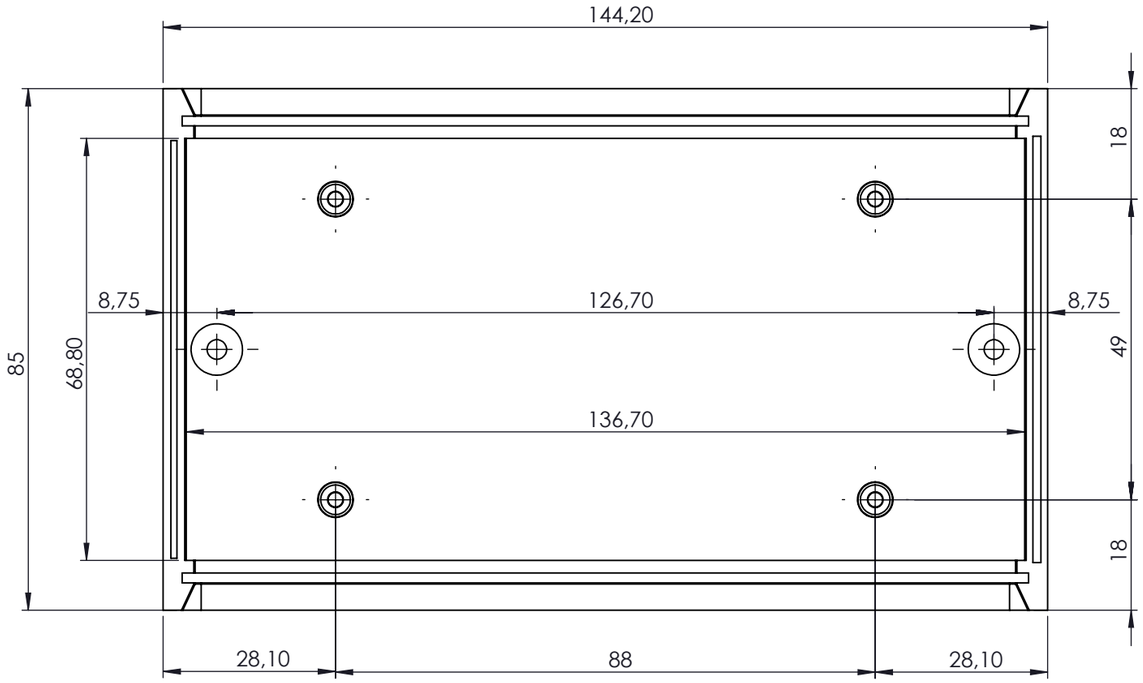

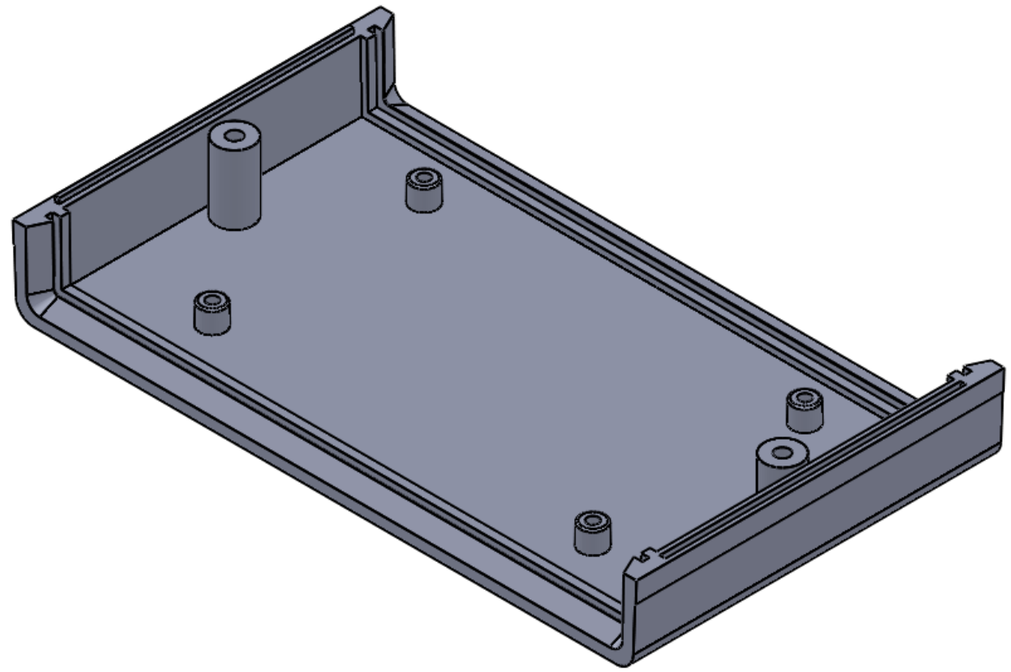

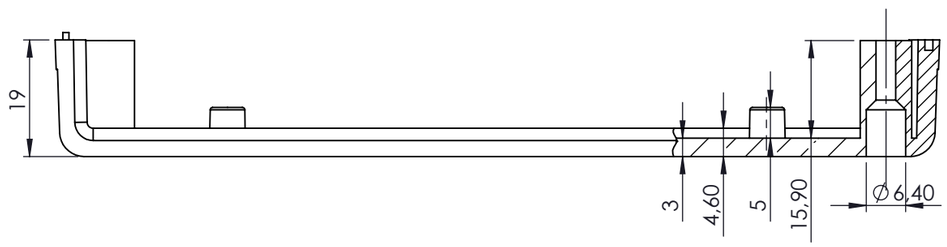

PROPRIETARY AND CONFIDENTIAL
THE INFORMATION CONTAINED IN THIS DRAWING IS THE SOLE PROPERTY OF ALTINKAYA ENCLOSURES. ANY REPRODUCTION IN PART OR AS A WHOLE WITHOUT THE WRITTEN PERMISSION OF ALTINKAYA ENCLOSURES IS PROHIBITED.

	NAME	DATE
DRAWN	Dursun CAN	
CHECKED	Ali Altınışık	

COMMENTS:

MATERIAL:

WEIGHT:

ARTICLE NO:

REVISION:

TITLE:

DWG NO. DT-085_Base

A3

SCALE:1:1

SHEET 1 OF 1

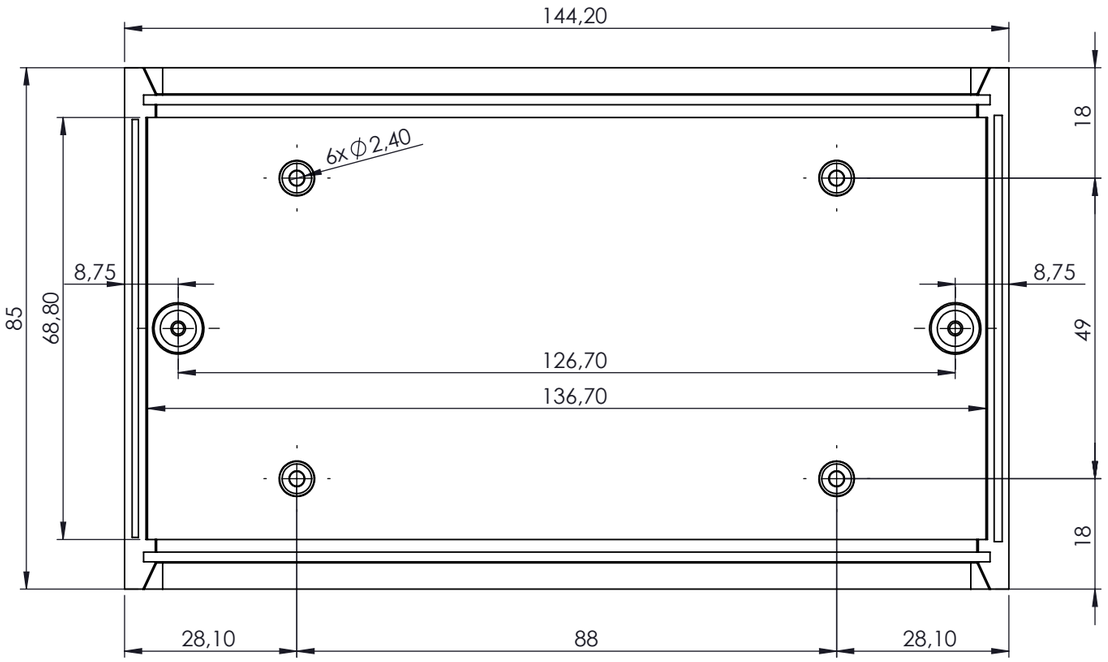

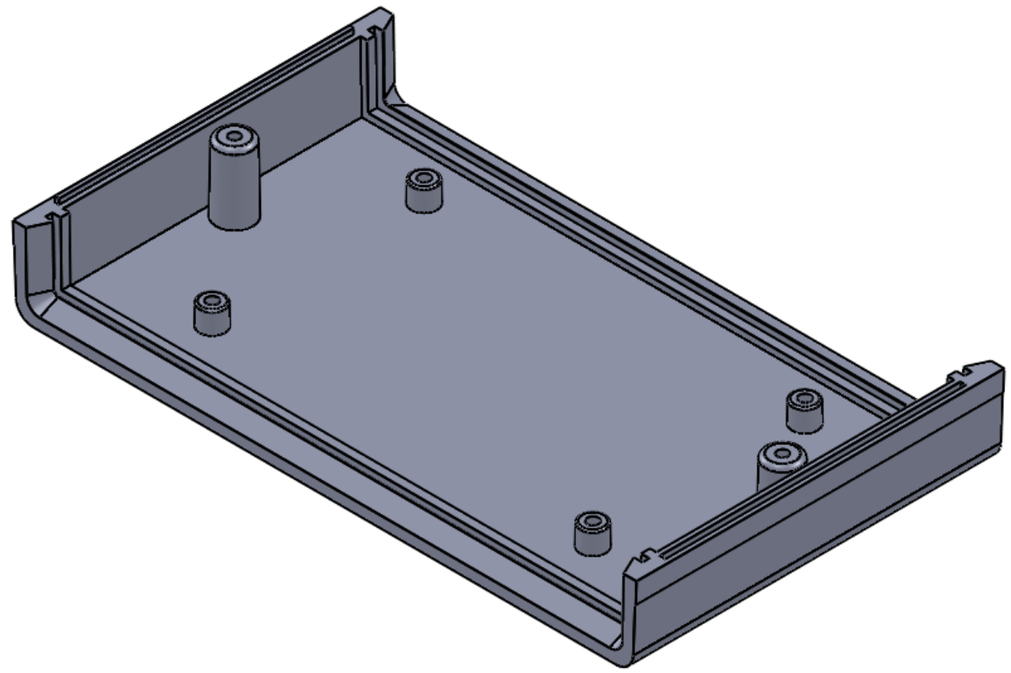

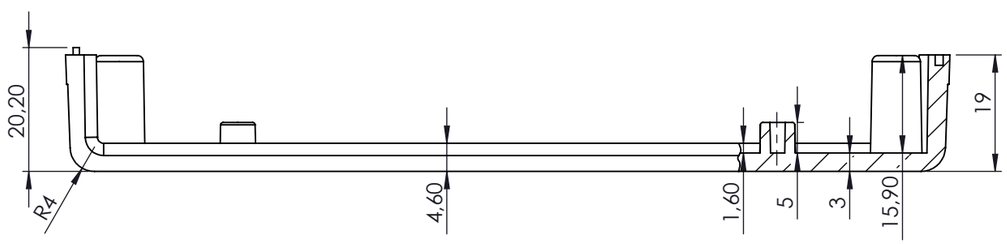

PROPRIETARY AND CONFIDENTIAL
THE INFORMATION CONTAINED IN THIS DRAWING IS THE SOLE PROPERTY OF ALTINKAYA ENCLOSURES. ANY REPRODUCTION IN PART OR AS A WHOLE WITHOUT THE WRITTEN PERMISSION OF ALTINKAYA ENCLOSURES IS PROHIBITED.

	NAME	DATE
DRAWN	Dursun CAN	
CHECKED	Ali Altınışık	

COMMENTS:

MATERIAL:

WEIGHT:

ARTICLE NO:

REVISION:

TITLE:

DWG NO. DT-085_Top

A3

SCALE:1:1

SHEET 1 OF 1

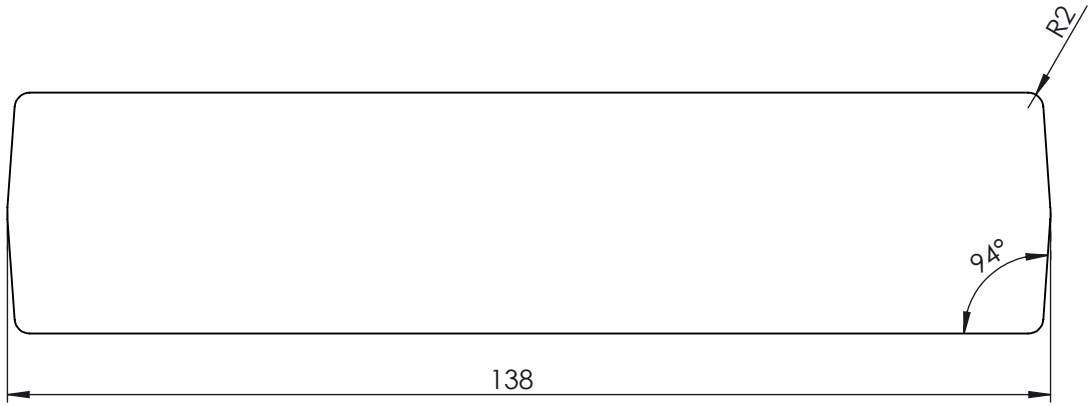

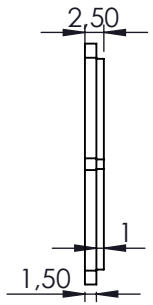

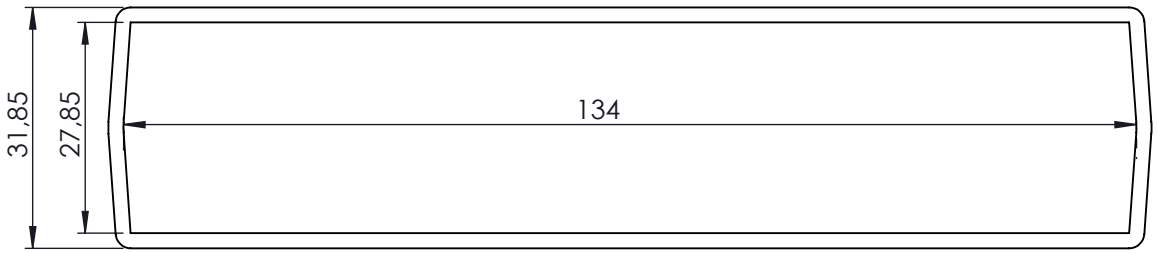

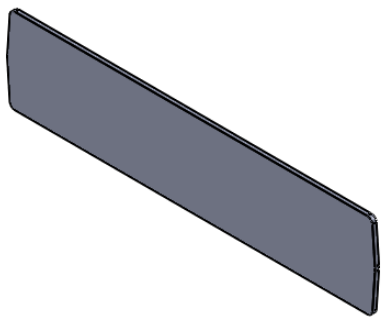

	NAME	DATE
DRAWN	Dursun CAN	
CHECKED	Ali Altınışık	

''

PROPRIETARY AND CONFIDENTIAL

THE INFORMATION CONTAINED IN THIS DRAWING IS THE SOLE PROPERTY OF ALTINKAYA ENCLOSURES. ANY REPRODUCTION IN PART OR AS A WHOLE WITHOUT THE WRITTEN PERMISSION OF ALTINKAYA ENCLOSURES IS PROHIBITED.

ARTICLE NO:

REVISION:

COMMENTS:

DIMENSIONS ARE IN MILLIMETERS,
DEBUR AND BREAK SHARP EDGES

MATERIAL:

TITLE:

DWG NO. DT-085_Panel

A4

WEIGHT:

SCALE:1:1

SHEET 1 OF 1